LIVING LAB
RWANDA

# Innovative Green Agricultural Mobility Platform

e-SUKA®

e-SUKA is a new category of electric agricultural mobility designed for accessibility, adaptability, and sustainable manufacturing in Africa

**Prepared by:** The Living Lab Rwanda

THE LIVING LAB RWANDA © 2026

# Our Story

**From Bosch to the land of a thousand Hills.**

For half a decade, our founder worked as a Research and Development (R&D) engineer at Bosch France, where every product was carefully adapted to fit the realities of the markets it served. This experience revealed a powerful truth — a product's success depends as much on its environment as on its design

In July 2025, he returned to Rwanda to establish "The Living Lab". A combination of engineering and agronomy to design and scale agricultural mechanization solutions that succeed in Africa, starting in Rwanda.

> *"It became clear that imported machines in Rwandan agriculture rarely align with local realities." (CEO Living Lab Rwanda)*
>
> **The Goal:** Build local capacity to design, test, and implement solutions that actually work for Rwanda.

THE LIVING LAB RWANDA © 2026

# Why It Matters

Agriculture is the backbone of our economy, yet productivity is stifled by a lack of appropriate tools.

**27%**

**of GDP**

Agriculture is central to national growth.

**1%**

**Mechanization**

Vast majority of farmers still use manual tools.

**0.72**

**Hectares**

Average farm size, often on steep terraces.

**Opportunity:** Mechanization can increase yields by 720-750 kg/ha.

THE LIVING LAB RWANDA © 2026

LIVING LAB
RWANDA

# The Core Problems

### 1. Design Relevance

There is no data on Rwanda's specific soil and terrain conditions guiding current machinery imports. We are guessing instead of designing.

### 2. Policy Ecosystem

A focus on imports + no testing standards = unfit machines. There is no "ecosystem" for maintenance or spare parts.

### 3. Human Capacity

We train "operators," not "engineers." There is a skills gap in critical evaluation and innovation of new technologies.

THE LIVING LAB RWANDA © 2026

# Why mechanization fails

| Manual Labor | Traditional Machines |
|---|---|
| Pay only when needed | High upfront cost |
| Flexible | Seasonal usage |
| No maintenance risk | Fuel & repair costs |

**Mechanization fails when ownership cost exceeds annual farm income.**
**Not resistance to innovation — just economics.**

THE LIVING LAB RWANDA © 2026

# e-SUKA® POSITIONING

**Current Farming reality**

Manual tilling ~30k–60k RWF/year (smallholder)

Transport costs ~100k RWF/year

Energy & generator usage ~50k–150k RWF/year

***Opportunity lies beyond farming alone***

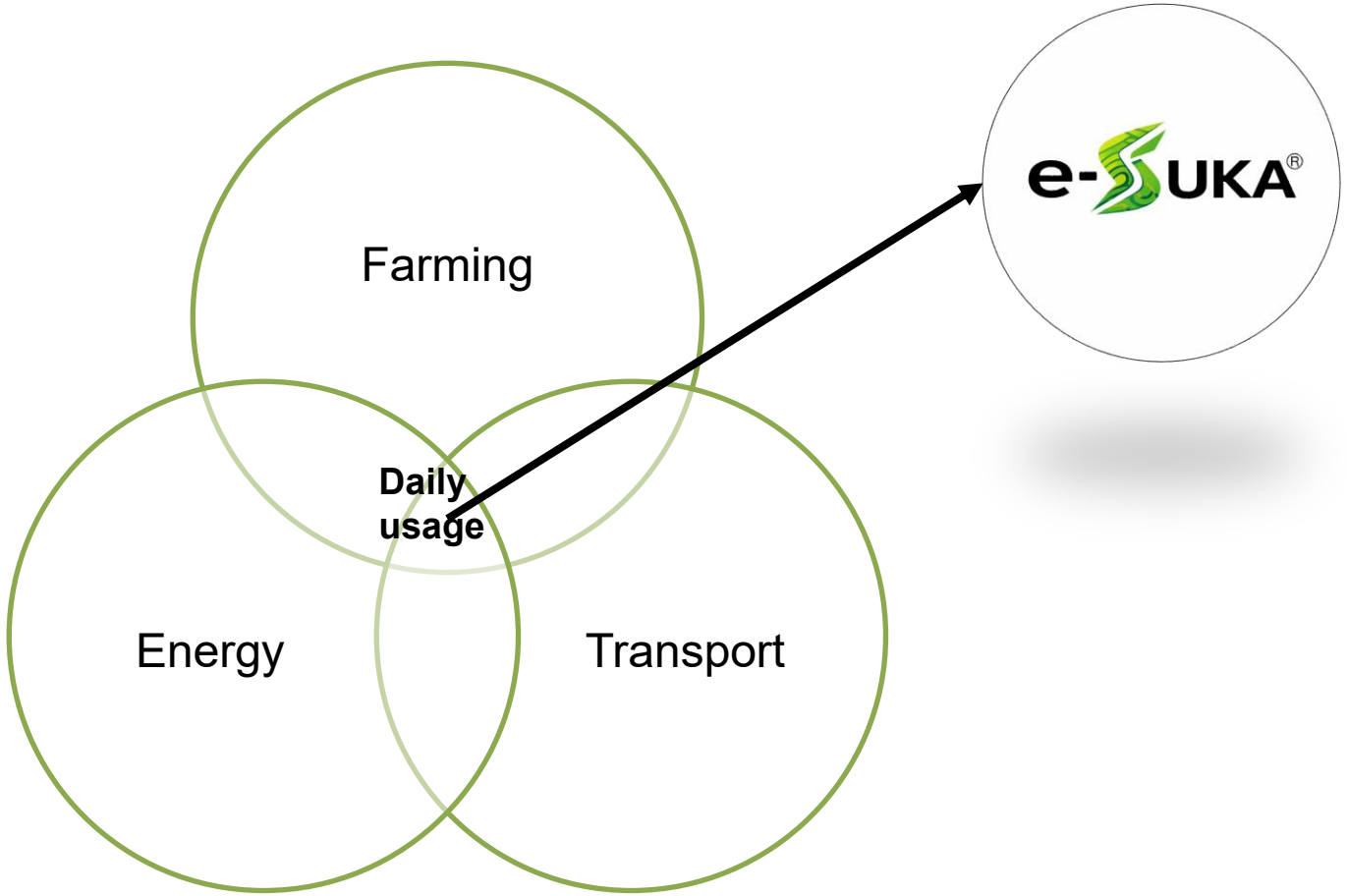

# e-SUKA® POSITIONING

**Example Daily Income Model**

- Transport: ~10k RWF/day
- Energy services: ~5k RWF/day
- Farm work (avg): ~5k RWF/day

Estimated total: ~20k RWF/day potential

Production Cost : 1.5 – 2 M

Selling Price : 2 - 2.5 M

Opportunities to reduce cost :
Local partners for battery ( Provide customized battery as a service, thus remove the price of the battery from the farmer ~500k)

Local produced raw materials (Steel frame, electronics etc)

# Our Product : e-SUKA® ELECTRIC AGRICULTURAL MOBILITY PLATFORM

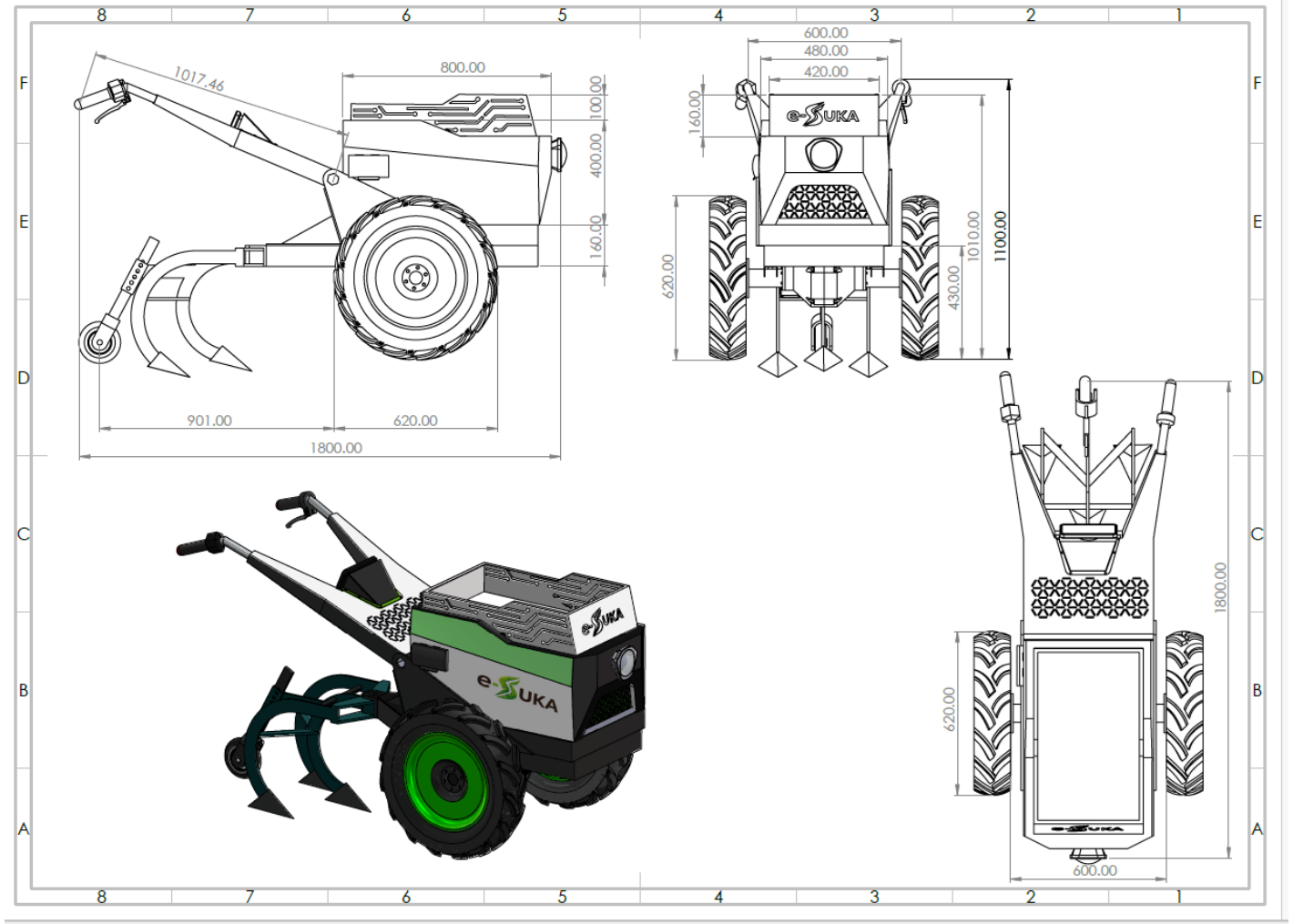


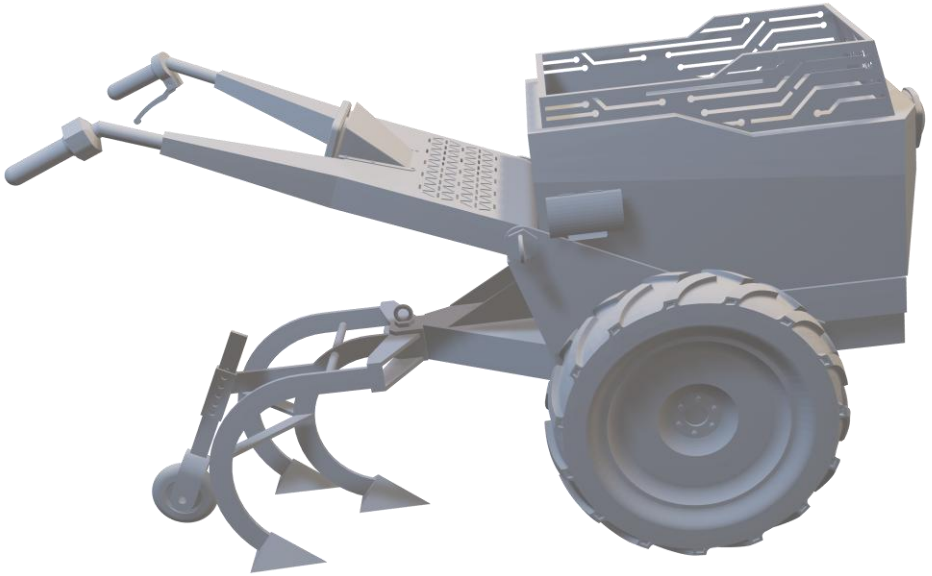

THE LIVING LAB RWANDA © 2026

# Our Product : e-SUKA® ELECTRIC AGRICULTURAL MOBILITY PLATFORM

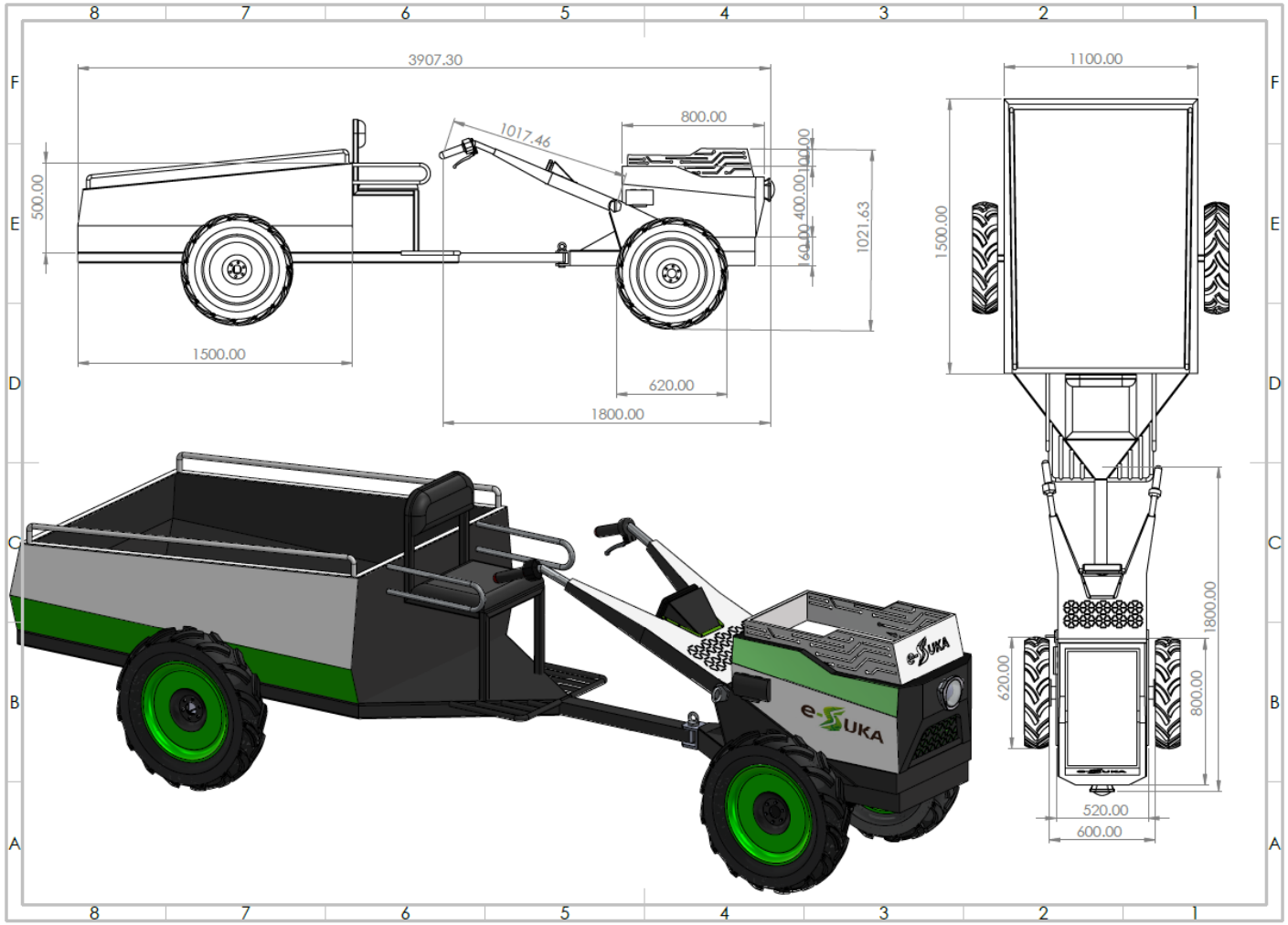


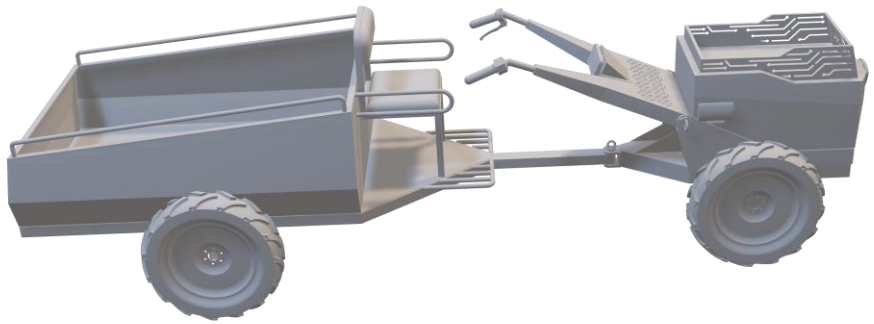

THE LIVING LAB RWANDA © 2026

LIVING LAB RWANDA

# Detailed Project Roadmap: Prototype to Production

We are currently in Phase 2 and targeting a production-ready design package by Q4 2026.

| P1 | P2 | P3 | P4 | P5 | P6 |
|---|---|---|---|---|---|
| **Concept & Hiring** | **Design & Sourcing** | **Prototyping Build** | **Design Validation (DVP)** | **Final Design Refinement** | **Industrialization** |
| Nov 2025 - Dec 2025 | Jan 2026 - Feb 2026 (2M) | Mar 2026 - Jun 2026 (3M) | Jun 2026 - Aug 2026 (3M) | Sep 2026 – Oct 2027 (2M) | Nov 2026 Onwards |
| Fully staffed Tech team<br>Concept note<br>Business registration | Production-ready 2D design package (DFMA). | 2-3 Fully assembled, functional prototypes. | Validated Field Data Report and Failure Analysis. | **Production-Ready Design Package.** | Scale Manufacturing & District Distribution. |

**The 500-hour DVP testing cycle (Phase 4) is rigorously budgeted for 3 months to accelerate time-to-market without compromising robustness.**

THE LIVING LAB RWANDA © 2026

# Challenges & Our Ask

LIVING LAB RWANDA

## Key Hurdles to Scale

### Prototype Capital Gap

Securing upfront funding to acquire raw materials and engine samples for the initial P3 build phase.

### Workshop Infrastructure

Lack of a dedicated, equipped workshop or "Living Lab" space to perform machining and assembly in-house.

### Global Supply Chain

Establishing reliable logistics channels for sourcing specialized components internationally (engines, bearings) without prohibitive delays.

## What We Need

### Seed Funding / Grants

Financial support to cover the **Prototyping Build (Phase 3)** budget, specifically for materials and tool acquisition.

### Facility Support

Access to a fabrication lab or funding to establish our own **Living Lab Workshop** for R&D and pilot assembly.

### Logistics Partnership

Strategic partners to facilitate the import of critical sub-assemblies and help navigate customs/sourcing.

THE LIVING LAB RWANDA © 2026

# Challenges & Our Ask

Prototype phase
Production cost : 2.5 – 3 M per unit

Mass production Phase

Production Cost : 1.5 – 2 M

Selling Price : 2 -  2.5 M

Opportunities to reduce cost :
Local partners for battery ( Provide customized battery as a service, thus remove the price of the battery from the farmer ~500k)

Local produced raw materials (Steel frame, electronics etc)

Developement Plan (Phase 2)

Budget spent so far : 10M
(Design developement, Labor cost, license tools, field work and test)

Prototype Plan (Phase3)

Build 6 prototypes (1 per province and 1 inhouse testing)

Total Protype cost : 18M
Design validation cost :  12M
(Logistic, operators, capacity building etc)

Total Budget : 30M

THE LIVING LAB RWANDA © 2026

# Summary & Next Steps

**Our Promise:**

The Living Lab is not just building a tiller; we are building an engineering ecosystem.
Our commitment is to a  40-50% cost reduction verified by DFMA, and unmatched robustness verified by the 500-hour DVP cycle.

**Call to Action:**

We seek strategic partners in funding, manufacturing, and agricultural policy to support:

- Securing funding for the 2026 Prototyping Phase.
- Establishing long-term partners and suppliers for critical components.
- Integrating the DVP standards into national mechanization policy.

# Murakoze. (Thank You)

THE LIVING LAB RWANDA © 2026

# Our Team

## Current Leadership

### Diogene Nkulikiyinka
**Founder**

Mechanical Engineer, R&D Expert.

### Marie Merci H. Rutayisire
**Farmer | Senior Consultant**

RICA Graduate, Farmer and Research enthousiast

## Team

### Pacifique ISHIMWE
**Designer | Consultant**

Rwanda Polytechnic Graduate

### Delice
**Agro Mechanization Intern**

Rwanda Polytechnic Graduate |Agriculture Mechanization

THE LIVING LAB RWANDA © 2026

# ANNEXES

THE LIVING LAB RWANDA © 2026

# The Living Lab Rwanda

**Vision:** To champion Rwanda's capacity to design, test, and showcase locally driven technologies.

**Mission:** To pioneer a culture of research and development in agricultural mechanization, challenge existing technologies, and drive innovation that strengthens Rwanda’s path toward food security.

**The Ecosystem:** We are building an integrated R&D environment. It brings together:

- **Farmers** (The Users)
- **Engineers** (The Builders)
- **Designers** (The Innovators)

This will create a breakthrough for farm machinery ownership

THE LIVING LAB RWANDA © 2026

# Design Strategy 1: Low Cost via DFMA

We use **Design for Manufacturing and Assembly** to substitute complex imports with local fabrication.

| Component | Simplification Strategy | Cost Reduction Impact |
|---|---|---|
| **Transmission** | Reduce transmission with direct link Motor-gearbox-wheel shaft | **50-70% Savings.** Eliminates need for tight tolerances, specialized tooling, and imported sub-assemblies. |
| **Chassis** | Use standardized C-channels and square tubing (50x50mm) available locally. | **25-35% Savings.** Zero import duty on structure. Utilization of local welding talent (TVETs). |
| **Controls** | Prioritize Mechanical linkages (cables/levers). | **High Reliability.** Reduces inventory costs and eliminates moisture-sensitive electronic failures. |

THE LIVING LAB RWANDA © 2026

# Strategy 2: Function Validation

Simplification does not mean weakness. We validate function using core engineering principles.

### Drivetrain Torque Calculation

$$T = \frac{9550 \times P}{N}$$

Determines required torque (T) from engine power ($P$) to ensure chain selection can handle the load without snapping.

### Frame Stress Analysis

$$\sigma = \frac{My}{I}$$

Ensures the locally welded frame geometry ($I$) can withstand bending moments ($M$) from deep tillage without yielding.

**Result:** A verified safety factor of >2.5 for all critical structural components.

THE LIVING LAB RWANDA © 2026

# Strategy 3: Robustness (DfSS)

### Non-Negotiable Materials

We use **Design for Six Sigma** to define critical-to-quality parameters.

### Harsh Validation Plan

| | |
|---|---|
| **Slope Stability** | Must operate safely on **30° inclines**. |
| **Endurance** | **500-hour** continuous load cycle without structural failure. |
| **Impact** | 5 strikes vs. buried stone (>20cm) with **zero fracture**. |

THE LIVING LAB RWANDA © 2026

# Engineering the Engine: Draft & HP Calculation

LIVING LAB RWANDA

## 1. The Load (Tractive Effort)

We calculate the total force (F_(trac) needed to overcome three specific resistances:

$$F_{Traction} = F_{draft} + R_{rolling} + R_{slope}$$

## 2. The Power (Engine Size)

We convert the required force into Horsepower, accounting for speed and drivetrain efficiency.

$$P = \frac{F_{Traction} \times V}{10000 \times \eta}$$

- **V (Velocity):** 0.6 m/s (Optimal tillage speed).
- **n (Efficiency):** 0.85 (High efficiency of Chain Drive).

**Calculated Requirement: 6.5 HP**

**Selected Engine: 8 HP**

(Includes 20% Safety Factor)

THE LIVING LAB RWANDA © 2026

# Engineering the Engine: Draft & HP Calculation

LIVING LAB RWANDA

## Step 1: Calculate Total Load

We sum the resistive forces for the worst-case scenario: heavy volcanic soil on a 30° slope.

| | |
|---|---|
| Draft Force (F_d) | **5,200 N** |
| (Area 0.05m^2 × Soil 80kPa × Factor 1.3) | |
| Rolling Resist. (R_r) | **+ 700 N** |
| Slope Gravity (R_s) | **+ 1,000 N** |

**Total Tractive Effort** **6,900 N**

## Step 2: Convert to Horsepower

We convert force to power using speed (0.6 m/s) and drivetrain efficiency (85%).

$$P = \frac{6900N \times 0.6m/s}{1000 \times 0.85(eff)}$$

| | |
|---|---|
| Result in Kilowatts | **4.87 kW** |
| Conversion (times 1.341) | **6.53 HP** |

**CALCULATED MINIMUM REQUIREMENT**

# 6.5 HP

We selected an **8 HP** engine to provide a robust **20% Safety Factor**.

THE LIVING LAB RWANDA © 2026

# Comprehensive Design Validation Plan (DVP)

Goal: Certify 40-50%  cost reduction is achieved without compromising reliability against ISO and ASTM standards.

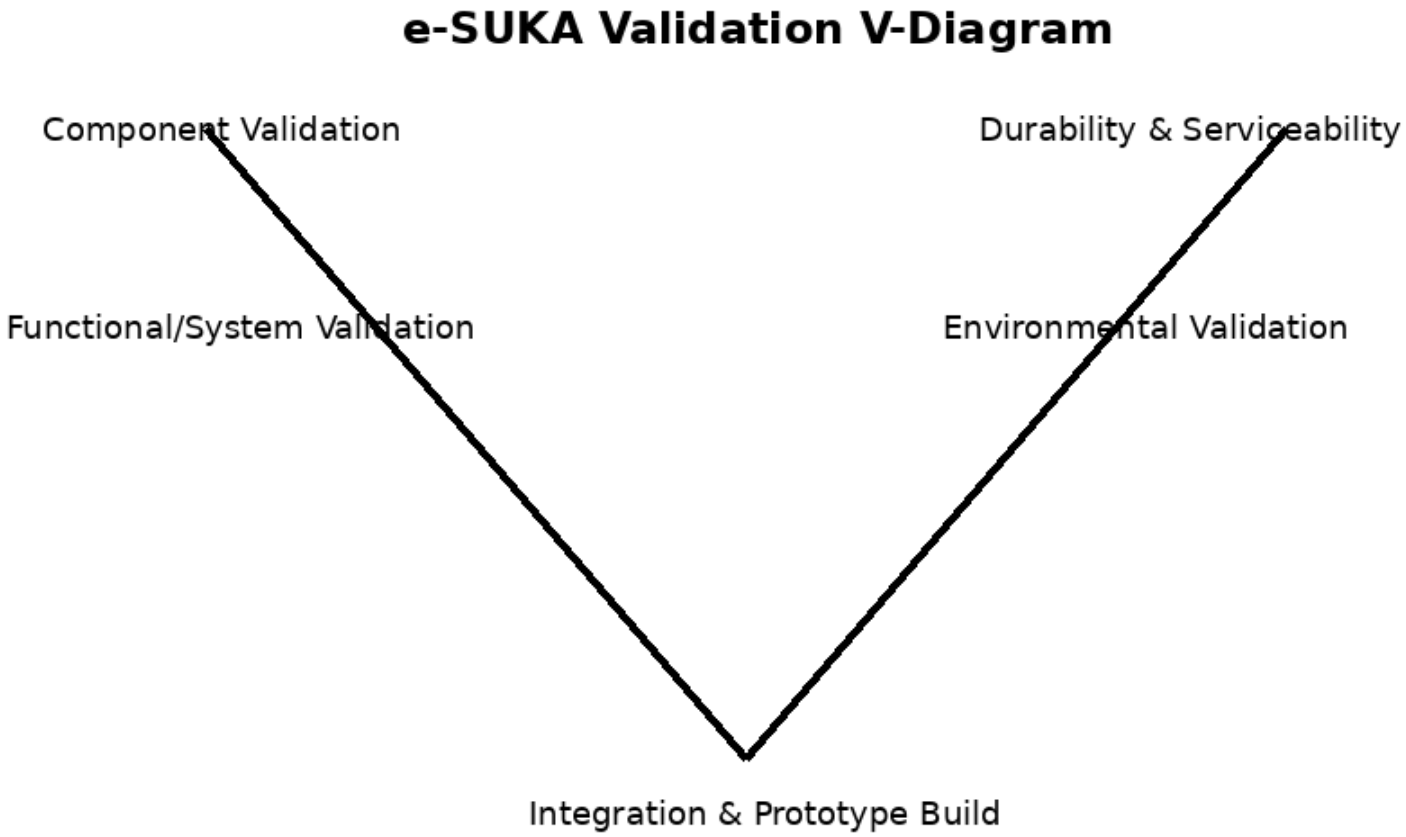


THE LIVING LAB RWANDA © 2026

# REFERENCES


1. Mmari, D., & Mpanduji, S. (2014, February). Frugal innovation for inclusive development: A case study on power tillers in Tanzania.
2. Ministry of Agriculture and Animal Resources (MINAGRI). (2024). Fifth strategic plan for agriculture transformation: Building resilient and sustainable agri-food systems (PSTA 5). Kigali, Rwanda.
3. Karangwa, M. (2010). The effect of land fragmentation on the productivity and technical efficiency of smallholder maize farms in Southern Rwanda (Master’s thesis, Makerere University). AgeconSearch.


**THE LIVING LAB RWANDA © 2026**